* VZ-LINK *
NEWSLETTER

<< AUCKLAND VZ 300/200 USERS CLUB >>

ISSUE # 24 SEPTEMBER 1988

Well,it's that time again.It's hard to believe that this is issue 24.

The club is two years old and still growing.
To all the new members welcome.Please don't hesitate to call or write if you have problems.

We are still looking for items for the newsletter.
Any item's of a computer nature would be really great,as would original VZ programs.

I would like to see a item on how to convert circuit dragrams to p.c boards myself.

Thank you again to those who have made the effort to attend the meetings.
The last meeting for 1988 will be held on Saturday 26th November at a venue to be announced.

The VZ users in Australia have done a lot to help me keep this newsletter going over the past two years.

To them we owe a larger then normal THANK YOU.

This issue has a competition for you all to have a go at.There is also a program written by Brooke Spong which will keep you thinking.

The support for the HIGH SCORES list has been a bit slow.
Maybe there are not many game players out there.
Have a look at this list and see if you can beat any of them.

So until next issue,happy VZing to you all.

HIGH SCORE LIST

GAME	SCORE	NAME
GALAXON	16890	PETER HILL
HAMBURGER SAM	55700	RICHARD SPONG
DAWN PATROL	99900	RICHARD SPONG
GHOST HUNTER	12690	PETER HILL
MISSILE ATTACK	37490	PETER HILL
PLANET PATROL	721	BRENDA HILL
LADDER CHALLENGE	21080	PETER HILL

NAVIGATION CALCULATOR

BY KEITH WRIGHT

```
5 REM   "NAV"
10 REM***NAVIGATION CALCULATOR
20 CLS:PRINT@416,"NOTE:- EXTENDED BASIC IS NEEDED"
25 PRINT:PRINT"  TO RUN THIS PROGRAM ! !"
30 SOUND26,1;29,2;31,3:PRINT:PRINT:PRINT
35 SOUND26,1;29,2;31,3:PRINT:PRINT:PRINT
40 FOR Z=27 TO 31:SOUND Z,1:NEXT
45 COLOR2,1:CLS:CLEAR 200:POKE30744,0
50 IF INKEY$<>"" THEN 50
55 PRINT @ 225,"DO YOU WANT TO USE A PRINTER?"
60 PRINT TAB(13);"(Y/N)
65 K$=INKEY$:K$=INKEY$:IF K$="" THEN 65
70 IF INKEY$<>""THEN 70
75 HC=0:IF K$="Y"THEN HC=1 ELSE IF K$<>"N" THEN 45
80 CLS
85 PRINT"*>*>*> NAVIGATION COMPUTER<*<*<*
90 PRINT" THIS PROGRAM WILL CALCULATE THE";
95 PRINT"GREAT CIRCLE DISTANCE BETWEEN
100 PRINT"ANY TWO POINTS.
105 PRINT" ALL POSITIONS, BOTH ORIGIN AND
110 PRINT"DESTINATION, ARE TO BE ENTERED
115 PRINT"IN THE FORMAT:-
120 PRINT"DEGREES COMMA MINUTES COMMA SEC.";
125 PRINT" I.E.,  <120,25,52>    [RETURN]
130 PRINT" LONGITUDES EAST, OR LATITUDES
135 PRINT"SOUTH, ARE ENTERED AS NEGATIVE
140 PRINT"VALUES.(USE '-' KEY BEFORE DEG, OR BEFORE MIN IF DEG = 0
145 IF HC=1,COPY
150 DEFINT D,M,S
155 DEFDBL X,P,N,E,O,F,D,G
160 PRINT:PRINT"PRESS <SPACE> TO CONTINUE ->->";
165 A$=INKEY$:A$=INKEY$:IFA$=""THEN165
170 IFINKEY$<>"",SOUND29,1:GOTO170
175 IFA$<>" "THEN 160
180 CLS:A$="STARTING ":B$="DESTINATION ":C$="LONGITUDE"
185 D$="LATITUDE"
190 PRINT">";A$;D$;:GOSUB305:N=P
195 PRINT">";A$;C$;:GOSUB305:E=P
200 FORZ=1TO32:PRINT"*";:NEXT
205 PRINT">";B$;D$;:GOSUB305:O=P
210 PRINT">";B$;C$;:GOSUB305:F=P
215 D=(SIN(N)*SIN(O))+(COS(N)*COS(O)*COS(F-E))
220 D=ATN(SQR((1-D*D)/(D*D)))
225 G=D:D=D*57.29578
230 PRINT:FORZ=1TO32:PRINT"*";:NEXT
235 PRINT:PRINT"DISTANCE IN :-
240 PRINT"  KILOMETRES   =";:X=D*111:GOSUB320
245 PRINT"NAUTICAL MILES =";:X=D*60:GOSUB320
250 PRINT"STATUTE  MILES =";:X=D*69.375:GOSUB320
255 REM*** HEADING CALCULATION
260 'H=((SIN(O)-(COS(G)*COS(N)))/(SIN(G)*COS(N)))
265 'H=ATN(SQR((1-H*H)/(H*H)))
270 'IFH<0,H=H*-1
275 'H=INT(H*57.29578+.5)
280 'IFSIN(E-F)<0,H=360*.0174533-H
285 'PRINT:PRINT" HEADING  =";H;"DEG.TRUE"
290 IF HC=1,COPY
295 FORZ=1TO5000:NEXT:GOTO180
300 STOP:REM  ** SUBROUTINES
305 INPUTD,M,S:P=ABS(D)+ABS(M)/60+ABS(S)/3600
310 IFD<0ORM<0ORS<0,P=P*-1
315 P=P*.0174533:RETURN
320 X=(INT(100*X+.5))/100:PRINTUSING"#####,.##";X:RETURN
```

SOFTWARE REVIEW

Review for Planet Patrol.
Written by Brenda Hill.

Loading time for tape 2 min 5 sec.
Loading time for disk 10 sec.
Keyboard or Joy Sticks optional.

Peter is forever writing program reviews for the computer clubs. I was looking through his newsletter index and I asked him" when was he going to write a review for Planet Patrol".
He turned around and told me"to do it myself",since I was such a fanatic of the game.

So here's the result.

This is one of the few games that peter has Not been able to master.
There are no instructions with this game other than what key's to use.
NOTE If you press the J key in error while using keyboard, you will have to sit that round out.

The objective of this game is to patrol the planet surface In your vehicle while avoiding unidentified object's.
The only way to decribe these objects are to call them craters,poles and bolders.

You must either jump the craters or bolders and shot the poles.
To add to the problem there is a plane that flies from left to right across the top of the screen.
This plane drops bombs at you.Sometimes it will even drop two bombs at once.
You must either shot the bombs or try and dodge them.

You will have three tanks to start with.If you get hit by a bomb or crash into the pole you get destroyed.
The same goes if you land on top of a bolder or in the crater,while jumping.
You are able to control the speed of your patrol vehicle by either speeding up or slowing down.

The game is over when you loss all three tanks.Then you get a delightful little tune and can start a new game.

(peter said The tune is annoying.)

SUMMARY

I find this game very relaxing.
It also helps you develop the speed and concentration needed for the more demanding games.
It also is great for improving your co-ordination.

The game is fairly well written.I get quite hooked on the game.
I can't stop once started and I am alway's trying to beat my previous best score.

COMPETITION

This month we have another COMPETITION for you.

All you have to do is design a LOGO for the VZ users club using 'high resolution' graphics on your VZ.
The LOGO must be suitable to use on the front of the newsletter and as a letter head.

The results will be judged on the way the program is written,as well as presentation.
Send your entry to me by november 19th.Judgeing will take place at the meeting on 26th November 88.

The prizes will be announced next issue.

FOR SALE

ORIGINAL VZ PROGRAM TAPES
AND SMALL RANGE P.C.B,S

REASONABLE RANGE OF VZ TAPES AT AUST.$5.00 EACH
SMALL RANGE OF P.C.B'S ALSO AVAILABLE (P.O.A)

SEND SELF ADDRESSED/STAMPED ENVELOPE FOR
A LIST OF TAPES AND P.C.B'S TO:-

DAVE BOYCE
41 HEATHER DRIVE
CHRISTIE DOWNS 5146
SOUTH AUSTRALIA

PLEASE INCLUDE FULL NAME AND ADDRESS

DAVE BOYCE ALSO HAS THE FOLLOWING FORSALE

1 COMPUTER SWITCH-THIS ENABLES YOU TO USE 2 COMPUTERS
AND ONE PRINTER

PRICE $50.00 + $5 P&P(AUST)

READY TO USE-JUST ADD 9 VOLTS DC-CONTACT DAVE AT THE ABOVE ADDRESS

JOYSTICK MODIFICATION

BY PETER PATTERSON

On the next two pages we have circuit diagrams drawn by PETER PATTERSON.

They show a MODIFIED VZ JOYSTICK INTERFACE and a schematic for QUICKSHOT II JOYSTICKS.
Peter has added 'D' connectors directly to the original VZ interface case.He has also added 5 volts to pin 7 for the QUICKSHOT controls.

See also Dave Boyces item in issue 10 for further information on updating JOYSTICKS.

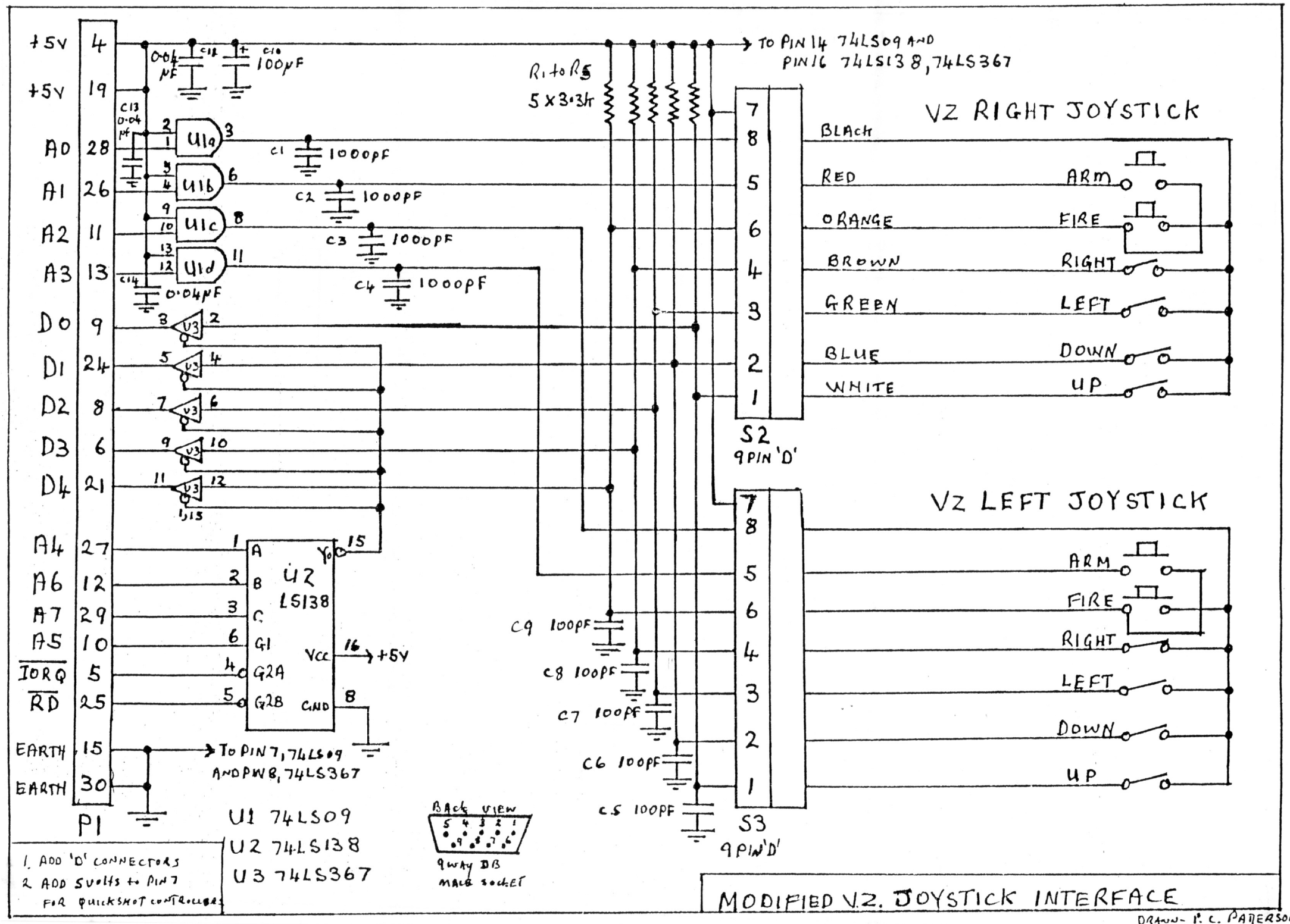
+5V
+5V
A0
A1
A2
A3
D0
D1
D2
D3
D4
A4
A6
A7
A5
IORQ
RD
EARTH
EARTH
P1
0.04 µF
C18
C10 100µF
C13 0.04 µF
C14 0.04µF
U1a
U1b
U1c
U1d
C1 1000pF
C2 1000pF
C3 1000pF
C4 1000pF
U3
U2 LS138
A
B
C
G1
G2A
G2B
Y0
Vcc
GND
+5V
TO PIN 7, 74LS09 AND PIN 8, 74LS367
R1 to R5 5 x 3.3k
TO PIN 14 74LS09 AND PIN 16 74LS138, 74LS367
C9 100pF
C8 100pF
C7 100pF
C6 100pF
C5 100pF
VZ RIGHT JOYSTICK
BLACK
RED
ORANGE
BROWN
GREEN
BLUE
WHITE
ARM
FIRE
RIGHT
LEFT
DOWN
UP
S2
9 PIN 'D'
VZ LEFT JOYSTICK
ARM
FIRE
RIGHT
LEFT
DOWN
UP
S3
9 PIN 'D'
BACK VIEW
9 WAY DB MALE SOCKET
U1 74LS09
U2 74LS138
U3 74LS367
1. ADD 'D' CONNECTORS
2. ADD 5 volts to PIN 7 FOR QUICKSHOT CONTROLLERS
MODIFIED V.Z. JOYSTICK INTERFACE
DRAWN - P. C. PATERSON.

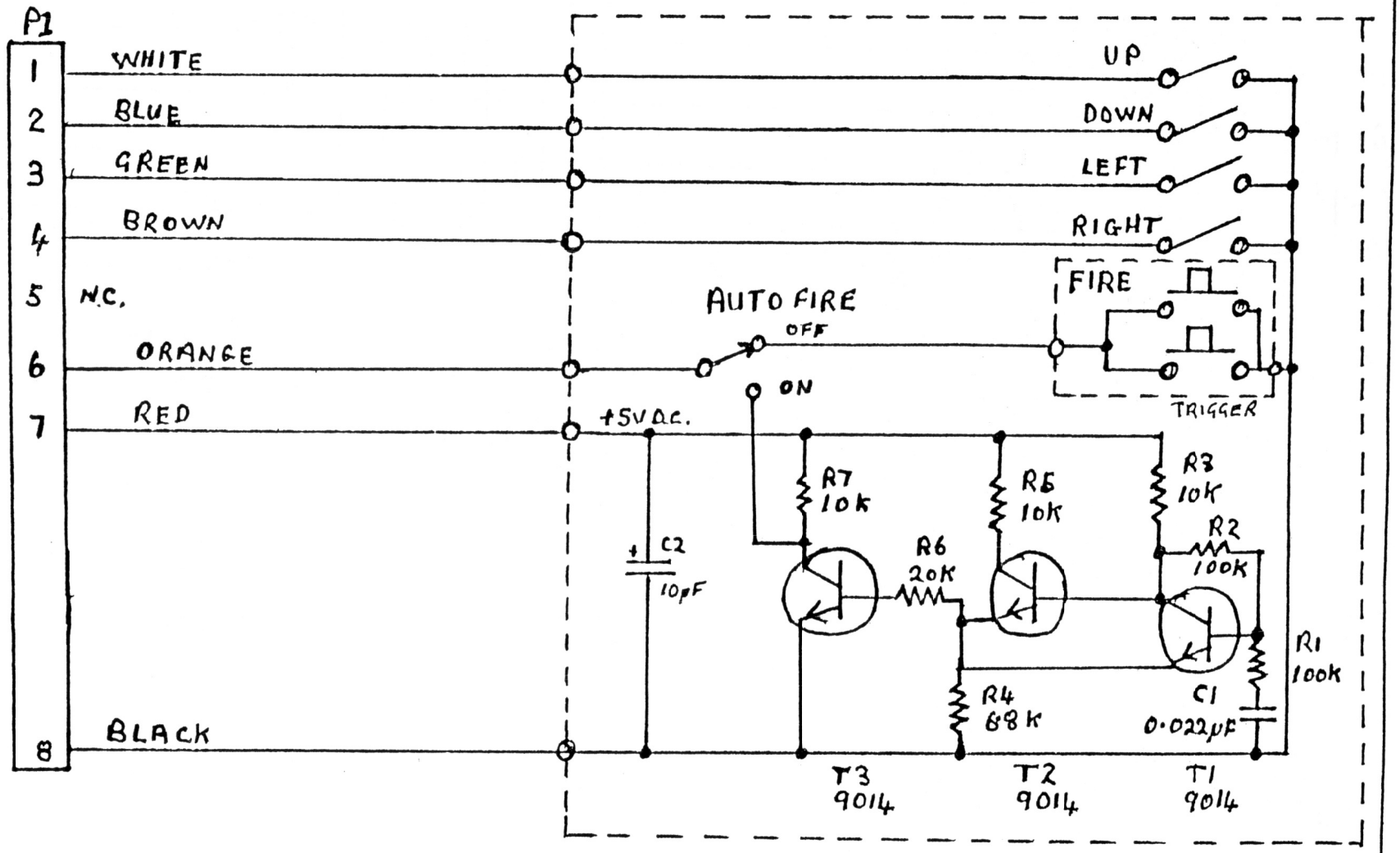

QUICKSHOT II JOYSTICK SCHEMATIC

DRAWN R.C.PATTERSON

MATH'S TESTER BY BROOKE SPONG

```
2 '*************************************************************
4 '* MATH'S TESTER WRITTEN BY BROOKE SPONG (NZ) FOR VZ200/300 *
6 '*************************************************************
8 :
10 CLS
12 GOSUB30000
14 GOSUB2000
16 S=0
20 CLS:PRINT@195,"MULTIPLICATION QUESTIONS"
30 PRINT:PRINT " HERE ARE 10 MULTIPLICATION "
38 PRINT" QUESTIONS AT LEVEL ";A$;" TO        TEST YOUR SKILLS"
40 FORF=1TO3000:NEXTF
41 IFA$="L1"THENX=INT(RND(0)*7)-1:Y=RND(6):IFX<0THEN41
42 IFA$="L2"THENX=RND(12):Y=RND(12):IFX<7ORY<7THEN42
43 IFA$="L3"THENX=RND(15):Y=RND(15):IFX<10ORY<10THEN43
44 IFA$="L4"THENX=RND(50):Y=RND(50):IFX<15ORY<15THEN44
48 CLS:PRINT@76,"LEVEL"
50 PRINT@66,"SCORE":PRINT@86,"ATTEMPTS":PRINT@291,"REPORT;"
51 PRINT@99,S:PRINT@121,T:PRINT@110,A$
52 T=T+1
53 IFT=11THENPRINT@299,"PROCESSING FINAL                REPORT"
54 IFT=11THENFORF=1TO800:NEXTF:GOTO91
59 PRINT: PRINT@200,Y" X ";X;"=";
61 INPUTZ
65 IF Z=Y*X THEN S=S+1:GOSUB1000:GOTO41
70 IF Z<>Y*X THEN GOSUB100
80 GOTO48
91 FORK=1TO800:NEXTK:CLS:PRINT@66,"########FINAL REPORT########"
92 PRINT: PRINT@128,"YOUR SCORE WAS";S;"CORRECT OUT OF ";
93 PRINT T-1 ;"ATTEMPTS WHICH EQUALS";INT(S/(T-1)*100);"%"
94 IFINT(S/(T-1)*100)>80THENGOSUB200
95 PRINT: PRINT"DO YOU WISH TO CARRY ON?? IF SO   PRESS RETURN";
96 INPUT Y
97 CLS
98 GOTO14
100 SOUND20,4;15,6:PRINT@299,"OOP'S TRY AGAIN"
105 FORG=1TO800:NEXTG
110 RETURN
200 PRINT: PRINT"THAT'S VERY CLEVER OF YOU GETING OVER 80% FOR ";
210 PRINT"THIS LEVEL ";A$;" TEST SO GOOD IN FACT THAT";
220 PRINT" I'LL PLAY  YOU A TUNE...."
225 FORU=1TO2000:NEXTU
230 SOUND15,3;15,4;15,3;20,5;20,5;22,5;22,5;27,6;24,3;20,3;20,2
231 SOUND24,3;20,3;17,5;25,6;22,3;19,2;20,5
240 RETURN
300 T=0:S=0
305 CLS:PRINT@200,"DIVISION QUESTIONS"
310 PRINT:PRINT" HERE ARE 10 DIVISION QUESTIONS  AT LEVEL ";A$;
320 PRINT" TO TEST YOUR SKILLS":FORF=1TO3000:NEXTF
350 IFA$="L1"THENY=RND(5):X=RND(5)*Y
351 IFA$="L2"THENY=RND(12):X=RND(12)*Y:IFY<6THEN351
352 IFA$="L3"THENY=RND(15):X=RND(15)*Y:IFY<10THEN352
353 IFA$="L4"THENY=RND(50):X=RND(50)*Y:IFY<15THEN353
360 CLS:PRINT@76,"LEVEL"
365 PRINT@66,"SCORE":PRINT@86,"ATTEMPTS":PRINT@291,"REPORT"
370 PRINT@99,S:PRINT@121,T:PRINT@110,A$
371 T=T+1
372 IFT=11THENPRINT@299,"PROCESSING FINAL                REPORT"
373 IFT=11THENFOR F=1TO800:NEXTF:GOTO91
375 PRINT:PRINT@200,X" % ";Y;"=";
380 INPUT Z
390 IFZ=X/YTHENS=S+1:GOSUB1000:GOTO350
395 IFZ<>X/YTHENGOSUB100:GOTO360
```

```
400 CLS:PRINT@198,"ADDITION QUESTIONS"
410 PRINT:PRINT" HERE ARE 10 ADDITION QUESTIONS  AT LEVEL ";A$;
420 PRINT" TO TEST YOUR SKILLS":FORF=1TO3000:NEXTF
430 T=0:S=0
431 IFA$="L1"THENY=RND(15):X=RND(15)
432 IFA$="L2"THENY=RND(50):X=RND(50):IFX<15ORY<15THEN432
433 IFA$="L3"THENY=RND(200):X=RND(200):IFX<50ORY<50THEN433
434 IFA$="L4"THENY=RND(2000):X=RND(2000):IFX<200ORY<200THEN434
445 CLS:PRINT@76,"LEVEL"
450 PRINT@66,"SCORE":PRINT@86,"ATTEMPTS":PRINT@291,"REPORT;"
460 PRINT@99,S:PRINT@121,T:PRINT@110,A$
461 T=T+1
462 IFT=11THENPRINT@299,"PROCESSING FINAL                    REPORT"
463 IFT=11THENFOR F=1TO800:NEXTF:GOTO91
465 PRINT:PRINT@200,Y" + ";X;"=";
470 INPUT Z
480 IFZ=X+YTHENS=S+1:GOSUB1000:GOTO 431
485 IFZ<>X+YTHENGOSUB100:GOTO445
500 CLS:PRINT@195,"SUBTRACTION QUESTIONS"
510 PRINT:PRINT" HERE ARE 10 SUBTRACTION "
511 PRINT" QUESTIONS AT LEVEL ";A$;" TO TEST   YOUR SKILLS"
512 FORF=1TO3000:NEXTF
520 T=0:S=0
521 IFA$="L1"THENY=RND(15):X=RND(15):IFY<XTHEN521
522 IFA$="L2"THENY=RND(50):X=RND(50):IFY<XORY<15ORX<15THEN522
523 IFA$="L3"THENY=RND(200):X=RND(200):IFY<XORY<50ORX<50THEN523
524 IFA$="L4"THENY=RND(2000):X=RND(2000)
525 IFA$="L4"THENIF Y<XORY<200ORX<200THEN524
527 CLS:PRINT@76,"LEVEL"
530 PRINT@66,"SCORE":PRINT@86,"ATTEMPTS":PRINT@291,"REPORT;"
532 PRINT@99,S:PRINT@121,T:PRINT@110,A$
535 T=T+1
536 IFT=11THENPRINT@299,"PROCESSING FINAL                    REPORT"
537 IFT=11THENFORF=1TO800:NEXTF:GOTO91
540 PRINT:PRINT@200,Y" - ";X;"=";
545 INPUT Z
555 IFZ<>Y-XTHENGOSUB100:GOTO527
570 IFZ=Y-XTHENS=S+1:GOSUB1000:GOTO 521
890 FORF=1TO800:NEXTF
895 GOTO 440
1000 IFS=1THENPRINT@299,"GOOD START !":FORF=1TO800:NEXTF
1005 IFS=2THENPRINT@299,"OK !":FORF=1TO800:NEXTF
1010 IFS=3THENPRINT@299,"FAIR !":FORF=1TO800:NEXTF
1015 IFS=4THENPRINT@299,"SHOWING PROMISE !":FORF=1TO800:NEXTF
1020 IFS=5THENPRINT@299,"GETTING BETTER !":FORF=1TO800:NEXTF
1030 IFS=6THENPRINT@299,"GOOD !":FORF=1TO800:NEXTF
1040 IFS=7THENPRINT@299,"VERY GOOD !":FORF=1TO800:NEXTF
1045 IFS=8THENPRINT@299,"GREAT !":FORF=1TO800:NEXTF
1050 IFS=9THENPRINT@299,"EXCELLENT !!":FORF=1TO800:NEXTF
1060 IFS=10THENPRINT@299,"FANTASTIC!!!":FORF=1TO800:NEXTF
1070 RETURN
2000 CLS: PRINT:PRINT" WHAT FUNCTION WOULD YOU LIKE"
2001 PRINT" TO TRY ;"
2010 PRINT:PRINT"      M = MULTIPLICATION "
2020 PRINT:PRINT"      D = DIVISION "
2030 PRINT:PRINT"      A = ADDITION "
2040 PRINT:PRINT"      S = SUBTRACTION "
2045 PRINT:PRINT" SELECT THEN PRESS RETURN";
2050 INPUTI$
2055 IFI$="M"ORI$="D"ORI$="A"ORI$="S"THENGOSUB4060
3000 IF I$<>"M" OR I$<>"D" OR I$<>"A" OR I$<>"S" THEN SU=1
3010 IFSU=1THEN PRINT"I DON'T UNDERSTAND ";I$
3020 IFSU=1THENSU=0: FORX=1TO700:NEXTX:GOTO2000
```

MATH'S TESTER CONT. . . . . .

```
4060 REM LEVEL
4070 CLS:PRINT@66,"WHAT LEVEL WOULD YOU LIKE,"
4080 PRINT:PRINT"    L1 = BENCH SITTERS"
4090 PRINT:PRINT"    L2 = MIDFIELDERS"
4100 PRINT:PRINT"    L3 = OUTFIELDERS"
4110 PRINT:PRINT"    L4 = HIGH FLYERS"
4115 PRINT:PRINT" SELECT THEN PRESS RETURN";
4120  INPUT A$
4130 IFA$="L1"ORA$="L2"ORA$="L3"ORA$="L4"THENL=1 ELSEL=5
4132 IFL=5THENPRINT"I DON'T UNDERSTAND ";A$:FORF=1TO700:NEXTF
4133 IFL=5THENGOTO4070
4140 IFL=1ANDI$="M"THENGOTO15
4150 IFL=1ANDI$="D"THENGOTO 300
4160 IFL=1ANDI$="A"THENGOTO400
4170 IFL=1ANDI$="S"THENGOTO500
30000 T$="MATHS TESTER":T=138:M=23:V=1:GOSUB30050
30010 T$="WRITTEN BY":T=203:M=16:GOSUB30050
30020 T$="BROOKE SPONG":T=266:M=9:V=5:GOSUB30050
30030 FORX=1TO1000:NEXTX:RETURN
30040 CLS
30050 FORN=1TO LEN(T$):PRINT@T,RIGHT$(T$,N);:NEXT:SOUNDM,V
30060 RETURN
```

SHIFT LOCK UPDATE BY JOE LEON .

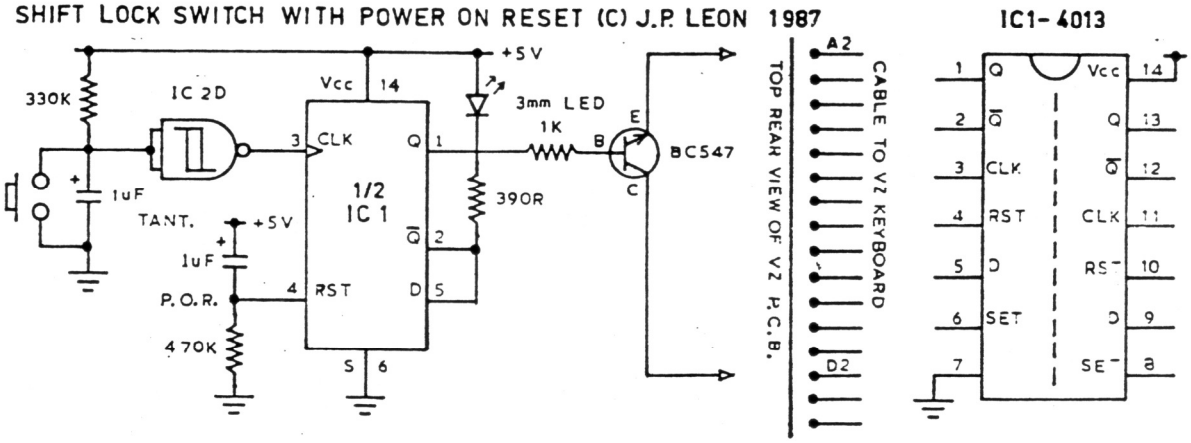

Instead of using a mechanical push on/push off switch an electronic FLIP FLOP can be used as a switch. This circuit uses one half of a dual flip flop and a single NAND gate left over from the updated NMI project in next issue.

The P.B. SW. shown can be a small momentary switch mounted anywhere convenient or the RIGHT SHIFT KEY on the VZ 300 Keyboard can be used. If you use the latter option then the track on either side of the Right Shift Key on the Keyboard P.C.B. must be cut. Solder a thin wire to each side of the KEYPAD on the track leading to the isolated Shift lock switch. The other ends of the two wires go as shown on the circuit diagram. While you have the Keyboard apart you may decide to mount the 3mm LED as I did right in the Shift Key Cap itself, right above the "I" in the word SHIFT. It looks neat.

Connecting the Transistor to the keyboard matrix is straightforward. When built the LED will let you know when the switch is on. If the LED is on, but Shift Lock is not then try reversing the leads from the Transistor. All unused INPUTS on both IC'S must be grounded or taken to +5V. Pinouts for both IC'S are shown to help intending constructors.

MAJOR M/LIST UPDATE — JOE LEON

This and the following two pages contain the changes and additions to be done to Mailing List to give disk users full compliment of disk commands. The most important being SAVE which allows you to save DATA FILES to disk using any filename up to 8 characters long. What it means is that now you can save many DATA FILES on disk instead of only one as per D.Smith's Technical Bulletin 111.

Whether you have original Mailing List or modified version according to Bullettin 111 the following mods are same for both versions and now to the conversions. If you have an Extended Basic with delete command then BRUN it first and then load Mailing List into the VZ.

STEP 1 - LIST line 20. It should read - 20 GOTO33 or 20 GOTO35. Next cursor up to line 20 and change 20 to 10. This new line 10 is the first modification and do not change it again as shown on next page. I bought my M/List years ago and when I compared it to the version being sold now line 20 was one of the differences I discovered. Therefore your new line 10 must GOTO where your previous line 20 went otherwise the mods wont work.

Before typing in the new lines some old and no longer neccessary lines must be deleted. Type in the following six lines one at a time pressing RETURN after each line number. 12 14 20 1085 1205 1300

Next a range of lines must be deleted. If you have Ext. Basic loaded then use the DELETE command with the following lines otherwise use the little delete routine below. 1000-1040 5000-5240 6000-7090 23000-23040

```
0 D1000-1040
2 POKE31469,68:LIST 0
4 POKE31469,182:GOTO 0
```

Next type in RUN4 and press RETURN and then type in RUN2 again pressing RETURN. If you try to LIST lines 1000-1040 you'll find they no longer exist. LIST line 0 and type in the next range of lines to be deleted and repeat previous procedure. Continue till all required lines have been deleted. Next delete above routine by typing 0 and pressing RETURN and the same for line 2 and 4.

Now we can proceed to enter the new lines and care must be taken with them because if you type in wrong line number you could wipe out existing line.

DO NOT CHANGE, ADD or SUBTRACT a single character or space in lines 10 to 20 as these are the heart of the new disk routines. All the spaces within the quote in above lines are 8 spaces long. When saving program to disk save it as DISKLIST.

The operations of the ERAse, REName, SAVE and LOAD routines are the same so any comments made about the ERAse routine also apply to the others as well.

ERASE ROUTINE (Lines 800-805) :-

Line 800 - INPUT N$ asks for FILENAME.
GOSUB770 - This is SPACE TO START 'Q' TO QUIT routine.
AD=31481 - This is the memory address of the first SPACE in line 12.
GOSUB22 - This is the FILENAME POKE routine. It POKEs the FILENAME you entered between the quotes in line 12. AD is the the address it pokes it in. If your filename is less than 8 characters then the POKE routine adds extra spaces to make up 8 characters.
GOSUB 12 - Line 12 does the actual ERAsing.

NOTE - If you list lines 10 to 20 after using ERA, REN, SAVE and LOAD functions you'll see previous filenames printed between the quotes. Take no notice of them as the NEW FILENAME writes over them.

```
10 GOTO35
12 ERA"          ":RETURN
14 REN"          ","          ":RETURN
16 OPEN"          ",1:PR#"          ",DT,DT$:RETURN
17 PR#"          ",D$(N):RETURN
18 OPEN"          ",0:IN#"          ",DT,DT$:RETURN
19 IN#"          ",D$(N):RETURN
20 CLOSE"          ":RETURN
21 '"■DO NT CHANGE LINES 10-20■
22 FORPO=0TO7:POKEAD+PO,ASC(MID$(N$+"          ",PO+1,1)):NEXT
23 RETURN
24 :

46 MI$="============================":REM 28 EQUAL SIGNS
47 SP$="                            ":REM 28 SPACES
48 SQ$="▌SPACE TO START / Q TO QUIT▐":MK$="▌■▐"

600 GOSUB30:COLOR7:PRINT@34,"▌DISK MENU▐    ";DT$
605 PRINT@66,MI$
610 PRINT@ 98,"R - REN  FILE  E - ERA  FILE"
615 PRINT@162,"S - SAVE DATA  L - LOAD DATA"
620 IFNE$="CHANGE"THENPRINT@163,MK$
630 PRINT@226,"D - DIRECTORY  I - INIT DISK"
635 PRINT@290,"M-MENU P-PEEK  S-SAVE R-REPL":PRINT@322,MI$
640 PRINT@354,SP$:PRINT@386,SP$:PRINT@450,SP$
645 COLOR7:PRINT@354,"▌SELECT FUNCTION▐      ":SOUND30,1
650 SF$="":DM$="":DM$=INKEY$:DM$=INKEY$:IFDM$=""THEN650
655 IFDM$="R"THEN820ELSEIFDM$="E"THEN800ELSEIFDM$="S"THEN880
660 IFDM$="L"THEN850ELSEIFDM$="D"THEN680ELSEIFDM$="I"THEN750
665 IFDM$="M"THEN1000ELSEIFDM$="^"THEN920
670 IFDM$="&"THEN935ELSEIFDM$="P"THEN700ELSE650
675 :
680 COLOR7:SF$="▌DISPLAY DIRECTORY▐":GOSUB770
685 CLS:DIR:STATUS:PRINT@17,"▌PRESS SPACE▐";
690 SOUND30,1:GOSUB780:GOSUB7000:GOTO600
695 :
700 REM"■MEMORY PEEK ROUTINE■
705 CLS:DM$="":PRINT@2,SQ$
710 FORPK=31477TO31682:PRINTPK;PEEK(PK);CHR$(PEEK(PK))
715 IFINKEY$=" "THEN720ELSEIFINKEY$="Q"THENGOSUB40000:GOTO600
720 IFINKEY$=""THEN715ELSENEXT
725 SOUND30,1:COLOR7:GOSUB28:GOTO600
730 :
750 SF$="▌INITIALISE DISK▐":GOSUB770
755 PRINT@450,"▌PLEASE WAIT 75 SECONDS▐";:SOUND30,1
760 INIT:GOTO685
765 :
770 COLOR7:PRINT@354,SF$:SF$=""
775 PRINT@450,SQ$;:SOUND30,1
780 IN$=INKEY$:IN$=INKEY$:IFIN$=""THEN780
785 IFIN$=" "THENRETURNELSEIFIN$="Q"THEN640ELSE780
795 :
800 PRINT@354,"▌ERA FILENAME▐  ";:SOUND30,1:INPUTN$:GOSUB770
805 AD=31481:GOSUB22:PRINT@450,SP$:GOSUB12:GOTO685
815 :
820 PRINT@354,"▌OLD FILENAME▐  ";:SOUND30,1:INPUTN$
825 AD=31501:GOSUB22
830 PRINT@386,"▌NEW FILENAME▐  ";:SOUND30,1:INPUTN$
835 AD=31512:GOSUB22:GOSUB770
840 PRINT@450,SP$:GOSUB14:GOTO685
845 :
```

```
850 PRINT@354,SP$
855 COLOR7:PRINT@354,"▌LOAD DATA FILE▐  ";:SOUND30,1:INPUTN$
860 GOSUB770:PRINT@450,SP$;:SOUND30,1:AD=31603:GOSUB22
865 AD=31619:GOSUB22:AD=31646:GOSUB22:AD=31674:GOSUB22
870 GOTO6000
875 :
880 IFDT<>0THEN890ELSEPRINT@353,"    ▌NO DATA IN MEMORY▐"
885 SOUND5,7:GOTO645
890 PRINT@354,"▌SAVE DATA FILE▐  ";:SOUND30,1:INPUTN$:GOSUB770
895 PRINT@450,SP$;:SOUND30,1:AD=31533:GOSUB22
900 AD=31549:GOSUB22:AD=31576:GOSUB22:AD=31674:GOSUB22
905 GOTO5000
915 :
920 SF$="▌REPLACE PROGRAM▐":GOSUB770:PRINT@450,SP$
925 COLOR7:PRINT@354,"▌ERASING▐ : DISKLIST  ";:SOUND30,1
930 ERA"DISKLIST"
935 SF$="▌SAVE PROGRAM▐   "
940 IFDM$="^"THEN945ELSEGOSUB770:PRINT@450,SP$
945 COLOR7:PRINT@354,"▌SAVING▐ : DISKLIST   ";:SOUND30,1
950 SAVE"DISKLIST"
955 GOSUB7000:GOTO600
960 :
1000 IFDT$=""THENDT$="NO DATE"
1010 GOSUB30:COLOR7:PRINT@34,"▌MAIN MENU▐     ";DT$:DM$=""
1020 PRINT@66,"NO. OF RECORDS IN FILE : ";:PRINTUSING"###";DT
1030 PRINT@98,MI$:PRINT@130,"1. ENTER DATA VIA KEYBOARD";
1040 PRINT@162,"2. ▌DOS DISK FUNCTIONS▐ ";
1045 IFNE$="CHANGE"THENPRINT MK$

1075 IFST$="SORT"THENPRINT MK$
1080 PRINT@290,"6. ENTER TODAYS DATE";

1110 PRINT@386,"9. PRINT MAILING LABELS":PRINT@418,MI$
1200 COLOR7:PRINT@450,"▌WHICH FUNCTION (1-9)?▐     ";:SOUND30,1
1210 K$=INKEY$:I$=INKEY$:IFI$=""THEN1210
1220 IFI$="6"THEN20000
1260 IFI$="2"THEN600

5000 REM"▌WRITE DATA TO DISK▐
5020 GOSUB16
5200 PRINT@354,"▌FILE CONSISTS OF";USING" ###";DT;
5210 PRINT" ▌RECORDS▐"
5220 FORN=1TODT
5225 PRINT@418,"▌WRITING RECORD #▐";USING" ###";N
5230 GOSUB17
5240 NEXT:GOSUB20

5330 IFI$="1"THEN600ELSEIFI$="2"THENDT=0:ST$="":DT$="":GOTO600

6000 REM"▌READ DATA FROM DISK▐
6020 GOSUB18
6030 PRINT@354,"▌FILE CONSISTS OF";USING" ###";DT;
6100 PRINT"▌RECORDS▐"
6110 FORN=1TODT
6120 GOSUB19
6125 PRINT@418,"▌LOADING RECORD #▐";USING"###";N
6130 NEXT
6140 GOSUB20:GOSUB7000:GOTO600
7000 GOSUB40000:GOSUB30:COLOR7
7010 PRINT@166,"┌──────────────────────┐"
7020 PRINT@198,"▌OPEN DRIVE DOOR▐"
7030 PRINT@230,"└──────────────────────┘":SOUND30,1
7040 IFDM$=""THENGOSUB27:RETURNELSEGOSUB28:RETURN
7090 :
```

USING DISKLIST - - - - - - - -

```
| MAIN MENU |          NO DATE
NO. OF RECORDS IN FILE :    0
==============================
1. ENTER DATA VIA KEYBOARD
2. | DOS DISK FUNCTIONS |
3. VIEW/EDIT RECORDS
4. VIEW NAMES IN FILE
5. SORT INTO ALPHA. ORDER
6. ENTER TODAYS DATE
7. PRINT NAME & PHONE LIST
8. PRINT COMPLETE LIST
9. PRINT MAILING LABELS
==============================
|WHICH FUNCTION (1-9) ?|
```

```
| DISK MENU |      NO DATE
==============================
R - REN  FILE   E - ERA  FILE
S - SAVE DATA   L - LOAD DATA
D - DIRECTORY   I - INIT DISK
M-MENU P-PEEK  &-SAVE ^-REPL
==============================
| SELECT FUNCTION |
```

MAIN MENU - As you'll notice by the MAIN MENU screen dump some changes have been made to it. The DATE status is printed at top of both Menus.

OPTION 2 - This now selects all the disk functions now.

OPTION 6 - The DATE can be entered anytime from the Main Menu.

OTHER OPTIONS - Refer to Mailing List instructions.

DISK MENU :-

R - RENAME FILE - This option is used to RENAME any disk files.

E - ERASE FILE - This option is used to ERASE any disk files.

S - SAVE DATA - This option is used to SAVE DATA files to disk using file name of your choice.

L - LOAD DATA - This option is used to LOAD DATA files from disk.

NOTE - FILENAMES can be from 1 to 8 characters long.

D - DIRECTORY - This option displays disk DIRectory and it's STATUS. Use this option before using any above.

I - INIT DISK - This option is used to INITialise disks.

M - MENU - This option displays MAIN MENU again.

P - PEEK - This option is used to find memory addresses for lines 10 to 20. If you want to change data in lines 10 to 20 then this routine will provide you with addresses required.

& - SAVE - This option will SAVE DISKLIST to disk.

^ - REPL - This option will ERASE DISKLIST from disk and REPLace (SAVE) with DISKLIST in memory.

NOTE - When most options are selected a QUIT option is provided in case you have to return to the MENU. The DATE is now also saved along with DATA FILE.

FILE NOT FOUND or FILE ALLREADY OPEN - If these ERRORS happen then DO NOT RUN DISKLIST as you will lose all the DATA. Instead put disk in drive, close door and type in the following to regain control without losing DATA.

GOTO 20 and press RETURN
GOTO685 and press RETURN

Line 20 will CLOSE OPEN FILE while line 685 will take you to the directory routine from where you can return to the menu.

GUIDELINES TO CAREFUL COMPUTING

DO . . .

*Read instructions.
*Ask for help from user's groups and friends.
*Back up disk data frequently.
*Keep disks in envelopes and store in covered boxes.
*Protect your equipment with dust covers.
*Clean your disk drive occasionally.
*Surround your equipment with plenty of airflow.
*Treat your equipment gently.
*Plug your computer and all peripherals into a switched power strip. Unplug from the wall when not in use.
*Use a voltage spike protector.
*Turn your system on one piece at a time, in this order: monitor, computer, disk drive and printer. Turn it off in reverse order.
*Turn off *all equipment* when connecting or disconnecting a peripheral

DON'T . . .

*Panic. Most problems aren't serious or permanent.
*smoke or cook around your disk drive.
*Eat, drink or use chemicals around your system.
*Plug and unplug cables or cartridges when the power is on.
*Touch exposed contacts on the joystick, cartridge, cassette and user ports with your fingers.
*Touch connectors with anything when the power is on.
*Block air vents on your equipment.
*Move your disk drive without inserting the cardboard head protector.
*Touch the shiny material on your disks.
*Write on disk covers with sharp points. Write on the label *before* applying it to the disk.
*bend or put pressure on disks.
*Store disks or tapes near a TV, electric motor or telephone bell.
*Set disks on top of your drive or monitor.
*store disks or tapes near magnets or things made of iron that could generate a magnetic field.

SOFTWARE FOR SALE

We now have the following software available for sale.
All prices shown include postage and packing anywhere in New Zealand.
Please make sure that the memory of your VZ is greater than or equal to the memory required by the software that you wish to purchase.
Memory sizes indicated do not include video ram.

ALL PRICES ARE SHOWN IN NEW ZEALAND DOLLARS.

BLACKJACK ROYALE	16K	$15.00	HAUNTED MANSION	22K	$15.00
CASTLE GREYSTONE	32K	$15.00	KNIGHTS QUEST	32K	$18.00
DATA	16K	$18.00	NAMESTAR/SHOPSTAR	22K	$15.00
FBI-2001	31K	$18.00	SCOTLAND YARD	16K	$ 8.00
GALACTIC EMPIRES	16K	$15.00	TRIVIAL CULT	16K	$ 8.00
GRAPHSTAR	22K	$24.00	VZ MONOPOLY V2.0	22K	$18.00

PLEASE MAKE ALL CHEQUES AND MONEY ORDERS PAYABLE TO-

AUCKLAND VZ 300/200 COMPUTER CLUB.

VZ DISASSEMBLER FOR SALE

This Disassembler is written by Peter Hickman.
And is also distributed as the "Laserlink Disassembler".

Peter is offering this very fine program to user group members for NZ$24.00.
All orders can be placed through this club,as peter has offered a cheaper price for bulk purchases.

The program is available on tape or disk.And comes in a 4 program version and
You choose which section you use depending on what memory you have.

ALL THESE PROGRAMS CAN BE DEMONSTRATED AT THE WORKSHOP IF REQUESTED

P.O.BOX 1972 C.P.O AUCKLAND N.Z

(C) AUCKLAND VZ 300/200 COMPUTER USER'S CLUB 1986

ALL MATERIAL IN THIS NEWSLETTER IS SUBJECT TO COPYRIGHT.
CONTRIBUTED PROGRAMS & ARTICLES CAN BE REPRODUCED ON THE UNDERSTANDING THAT THEY ARE FOR THE PRIVATE USE OF SUBSCRIBERS ONLY.
COPYRIGHT IS ALWAY'S RETAINED BY THE AUTHOR.
THIS CLUB WILL NOT BE HELD RESPONSIBLE FOR THE BREECHING OF COPYRIGHT CAUSED BY THE PUBLICATION OF ANY MATERIAL SENT IN UNDER A FALSE NAME.

YOU ARE WELCOME TO PHONE ME BETWEEN 6.30 PM AND 9 PM ----PHONE 673-967